CR-N700

Unit:mm

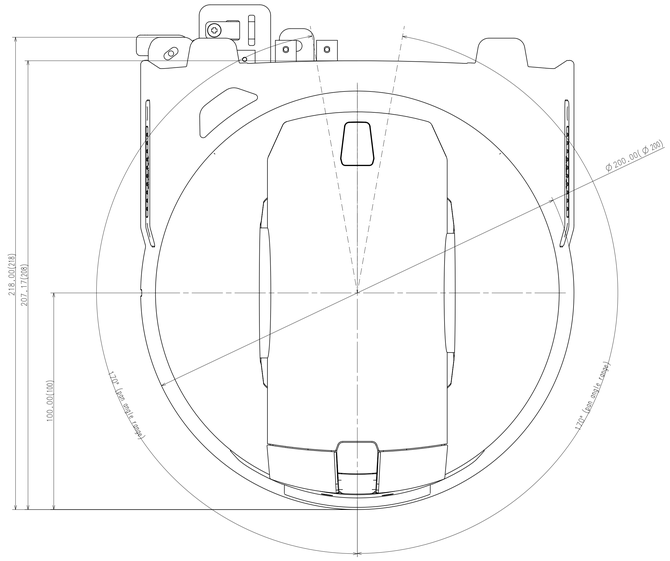

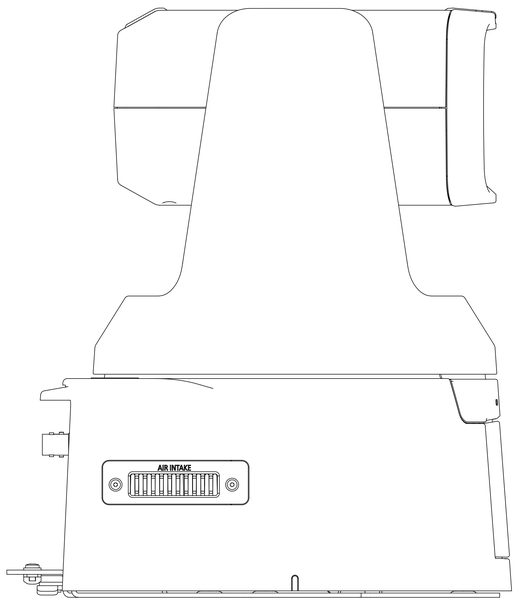

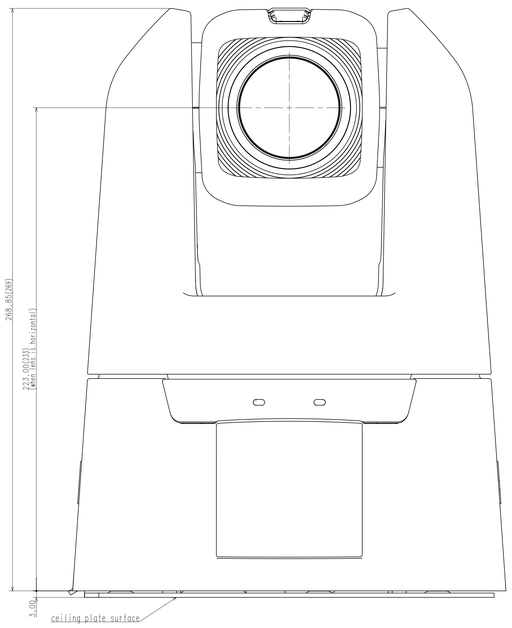

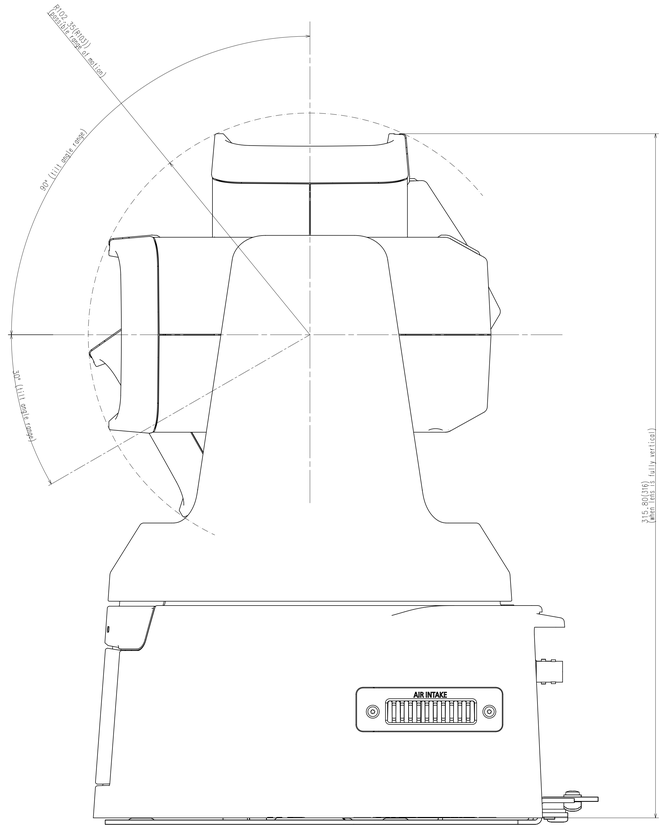

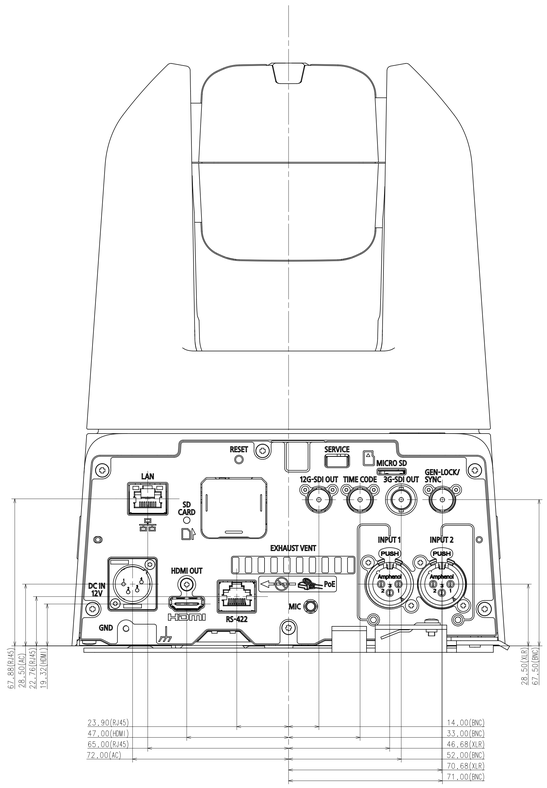

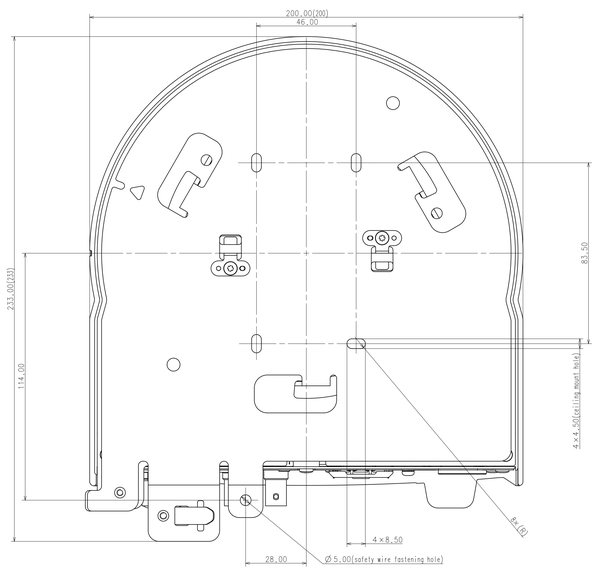

REV.	DATE	NOTE	DRAWN	DESIGNED	APPROVED
01	2022/12/20		A.SUZUKI	R.TANAAMI	T.NODA